# THERMO-ELECTRO-MECHANICAL MODELING OF A HALL-HÉROULT CELL COKE-BED PREHEATING

Daniel Richard[1], Patrice Goulet[2], Marc Dupuis[3], Jérôme Bédard & Mario Fafard[2]

[1] Hatch Ltd., Montréal
[2] Laval University, Québec City
[3] GéniSim Inc., Jonquière

MONTRÉAL COM2006
CONFERENCE OF METALLURGISTS

# Plan

- Introduction
- Aspects of Cell Mechanical Behaviour
- Finite Element Demonstration Slice Model
- Coke-Bed Electrical Preheating Results
- Conclusions

MONTRÉAL
COM2006
CONFERENCE OF METALLURGISTS

# Introduction

- Start-up has a strong influence on pot life.
- Typically, the first phase of start-up is preheating.
- Main objectives:
  - Avoid bath freezing on cathode block at pour-in
  - Avoid cathode block cracking
  - Avoid gaps that would allow infiltration.

MONTRÉAL
COM2006
CONFERENCE OF METALLURGISTS

# Introduction (2)

- Ideal preheating is:
  - Fast (for metal production)
  - Smooth (for cell performance and life).
- Optimal preheating strategy elusive.
- Numerical modeling is a powerful analysis tool.

# Aspects of Cell Mechanical Behaviour

- Cell construction
  - Contact interfaces.
- Lining mechanical behavior
  - Prebaked carbon blocks, castables …
- Irreversible time-response
  - E.g. Baking of ramming paste.
- Lining / pot shell interaction
  - Strain-driven problem.

# FE Demonstration Slice Model

- VAW 300 kA PFPB design (JOM 1994) adapted by Dupuis (GéniSIM)

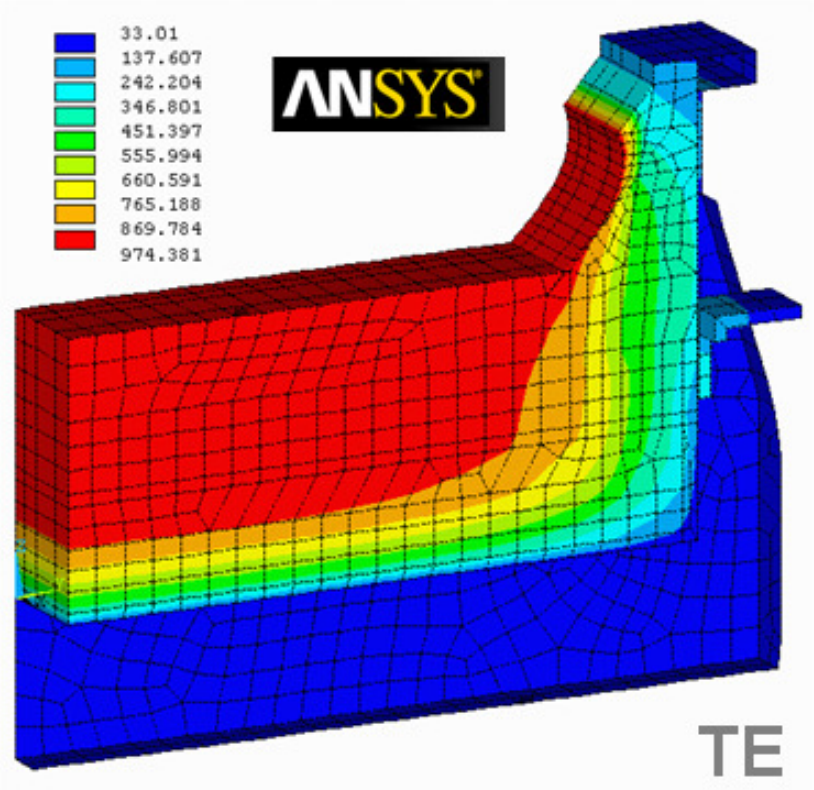

# FE Demonstration Slice Model

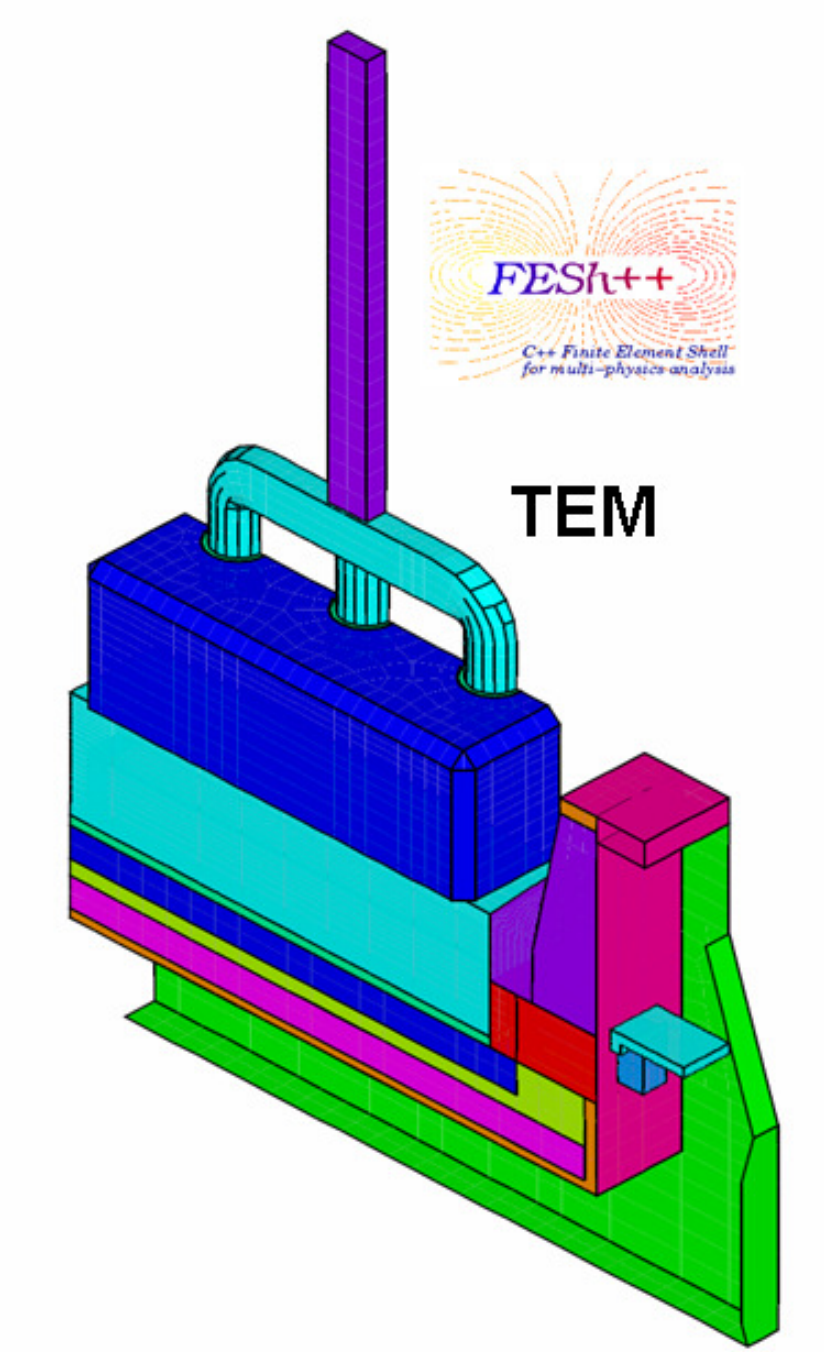


MONTRÉAL
COM2006
CONFERENCE OF METALLURGISTS

# FE Demonstration Slice Model

## "Dummy Slice"

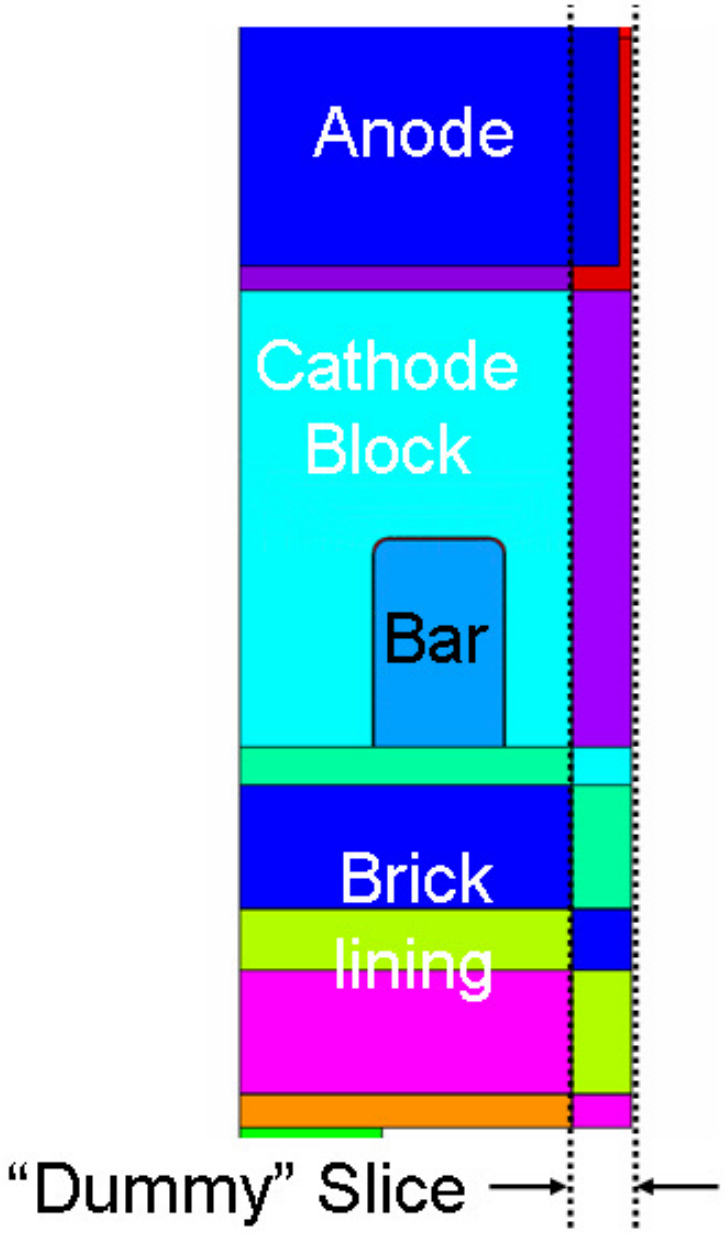


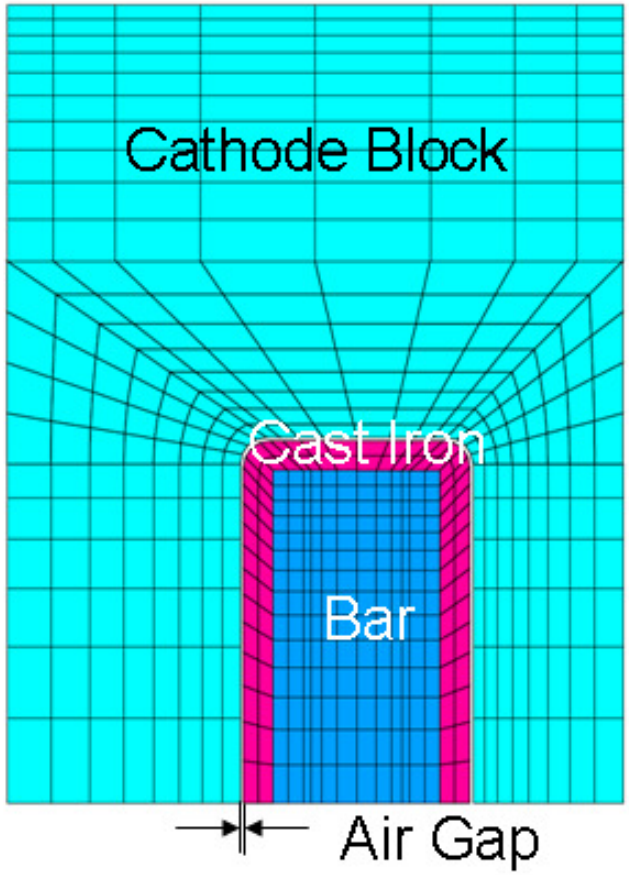


MONTRÉAL
COM2006
CONFERENCE OF METALLURGISTS

# FE Demonstration Slice Model

## Contact Interfaces

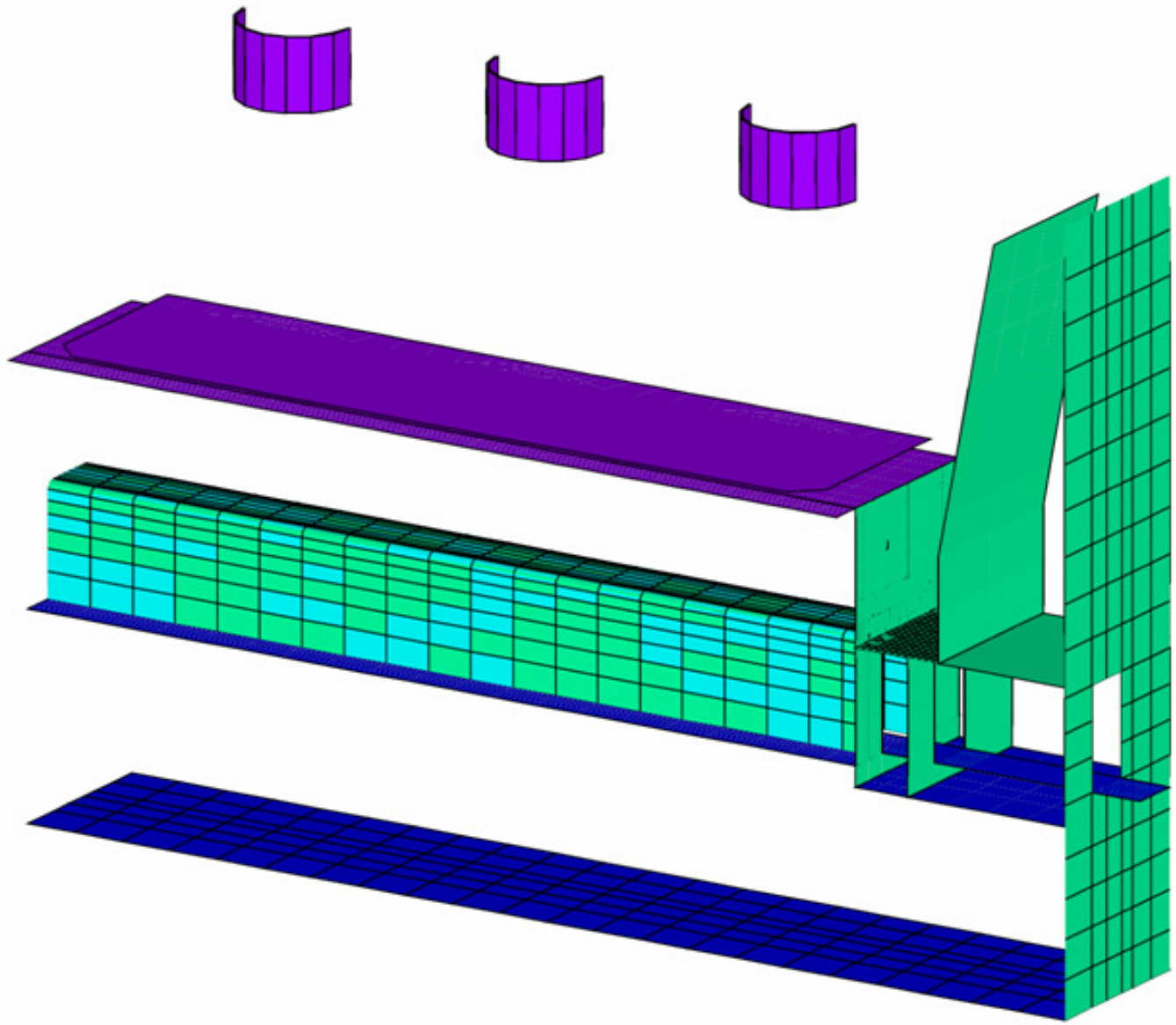

MONTRÉAL COM2006
CONFERENCE OF METALLURGISTS

# FE Demonstration Slice Model

## Mechanical Mesh

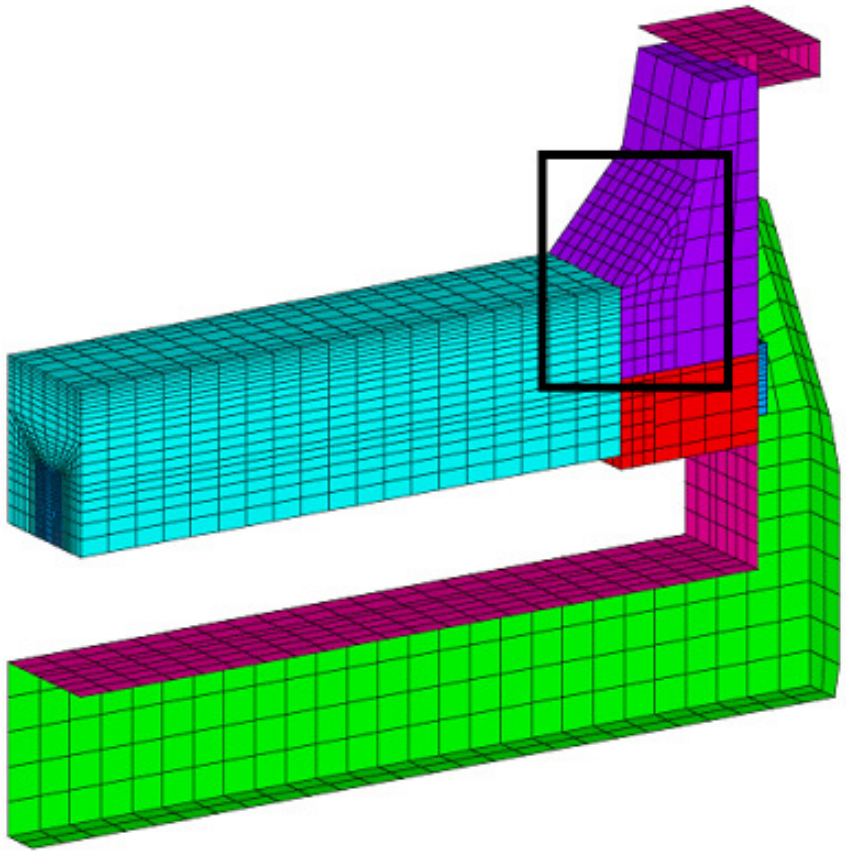

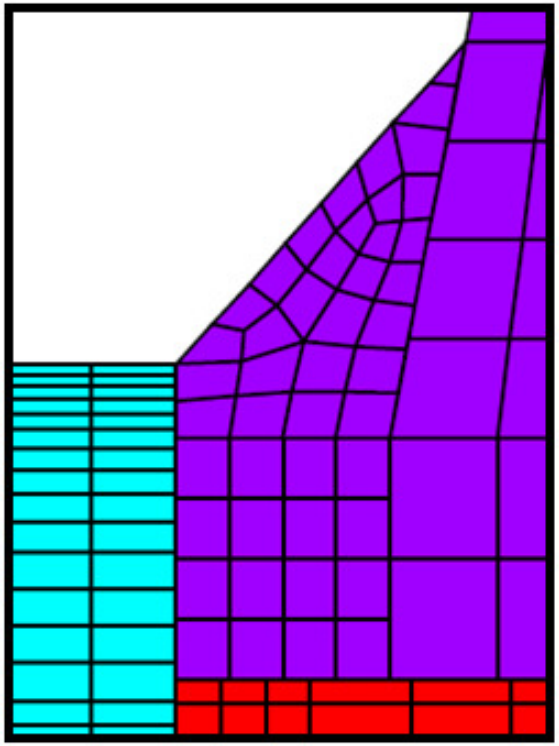

MONTRÉAL
COM2006
CONFERENCE OF METALLURGISTS

# FE Demonstration Slice Model

## Lining Mechanical Material Models

- Quasi-brittle
  - Cathode block
  - Sideblock
  - Castable
- Reactive Quasi-brittle*
  - Ramming paste
- Elastic
  - Steel shell
  - Collector Bar
  - Cast iron
  - Pier

* *Richard et al., TMS 2005*

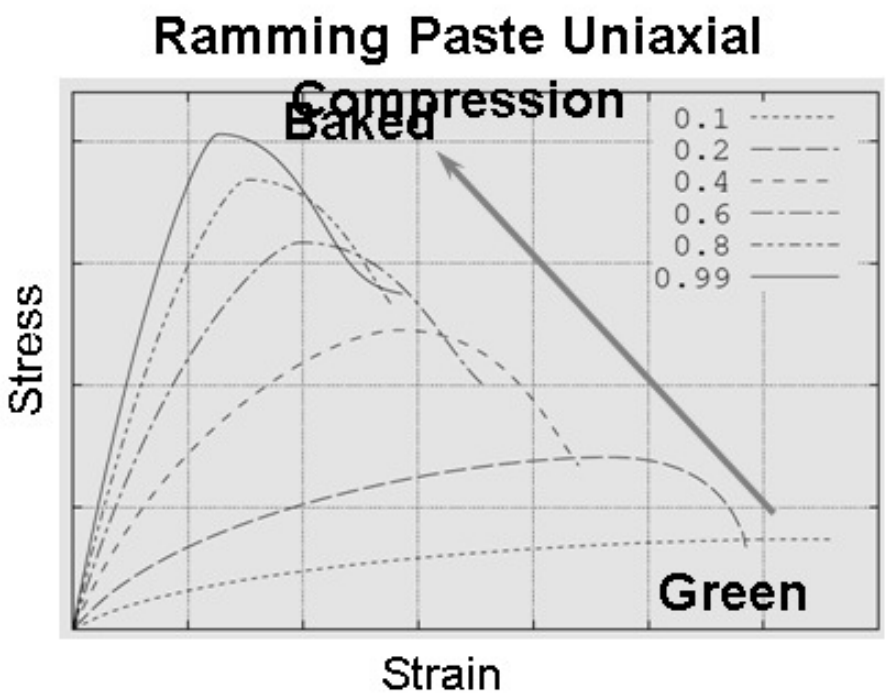


MONTRÉAL COM2006
CONFERENCE OF METALLURGISTS

# FE Demonstration Slice Model

## Electrical Contact Resistance (ECR)

- Coke-bed electrical resistance lumped into anode to cathode ECR (temperature-dependent only).
- Cast Iron-to-Carbon ECR depends on both Contact Pressure and Temperature … ***Fully Coupled TEM !***

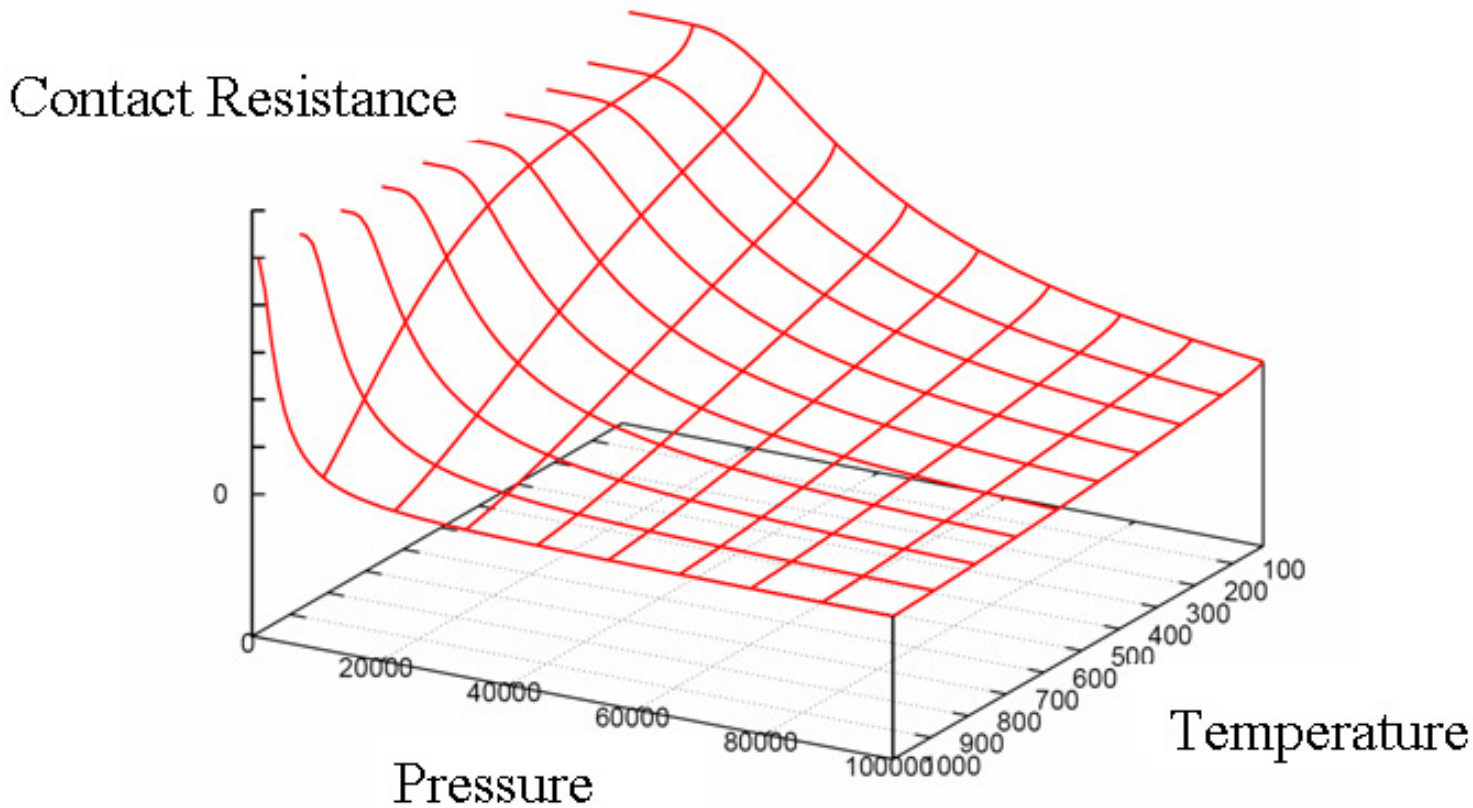


MONTRÉAL COM2006 CONFERENCE OF METALLURGISTS

# FE Demonstration Slice Model

## Boundary Conditions - Mechanical

- Symmetry on S1 and S2
- *In reality, conditions on P3 depend on shell and lining interaction*
- Extreme cases for P3
  - Symmetry
  - Free
- Gravity load

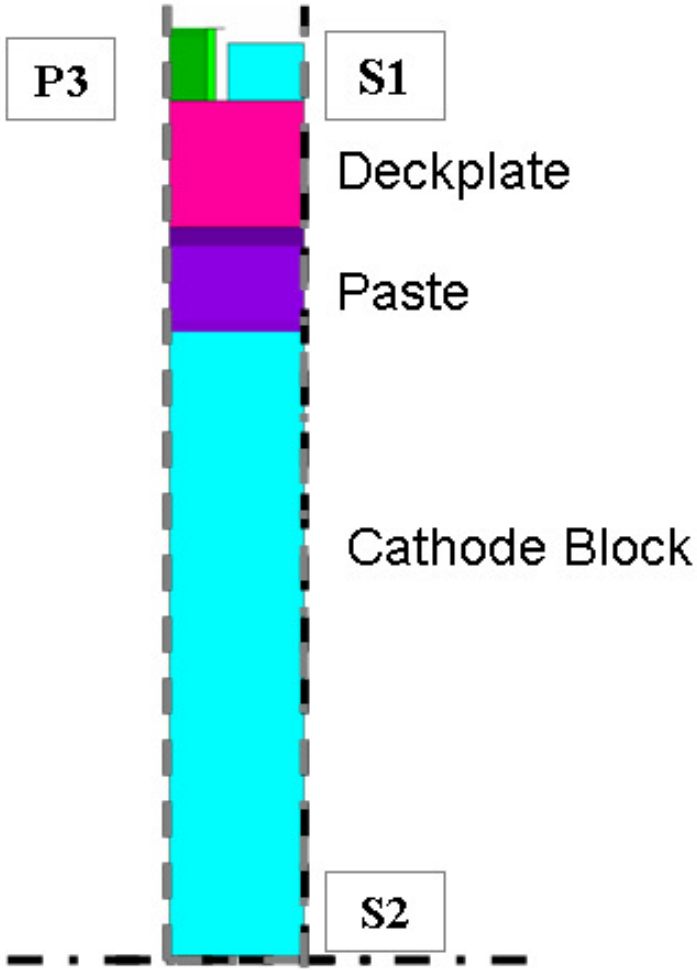


MONTRÉAL
COM2006
CONFERENCE OF METALLURGISTS

# FE Demonstration Slice Model

## Boundary Conditions - Thermal

- ① Insulated ramming paste and sidewall
  - $h = 1\ W/m^2K$
- Insulated anode sides
- Equivalent natural convection for all other surfaces
  - Representative ambient temperature and radiative temperature
  - Convection coefficient depending on surface orientation.

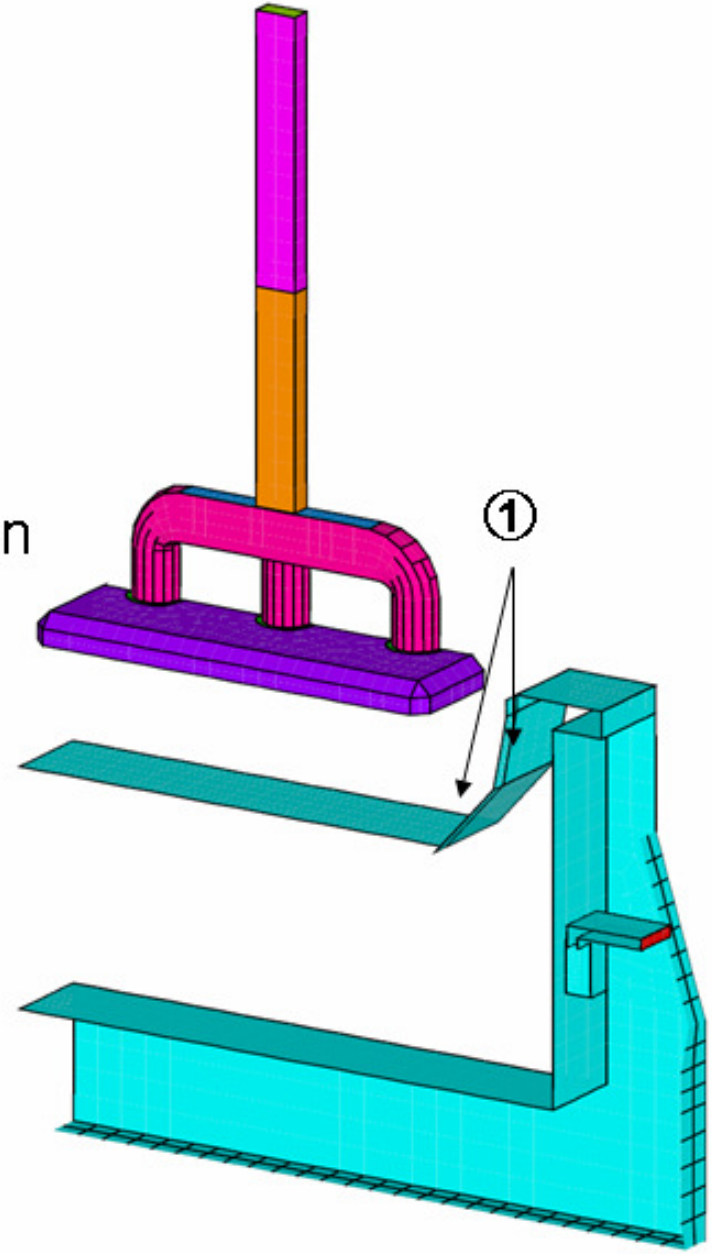


MONTRÉAL
COM2006
CONFERENCE OF METALLURGISTS

# FE Demonstration Slice Model

## Boundary Conditions - Electrical

- 2 scenarios:
  - Full Line Load for 48h
  - Using 4 shunts:

| Time | Number of Shunts | Fraction of current into cell |
|---|---|---|
| 0 – 5h | 4 | 60% |
| 5 – 10h | 3 | 70% |
| 10 – 15h | 2 | 80% |
| 15 – 20h | 1 | 90% |
| 20 – 48h | 0 | 100% |

# Coke-Bed Preheating Results

## Voltage

- As expected, initial power input much larger for Full Line Load.

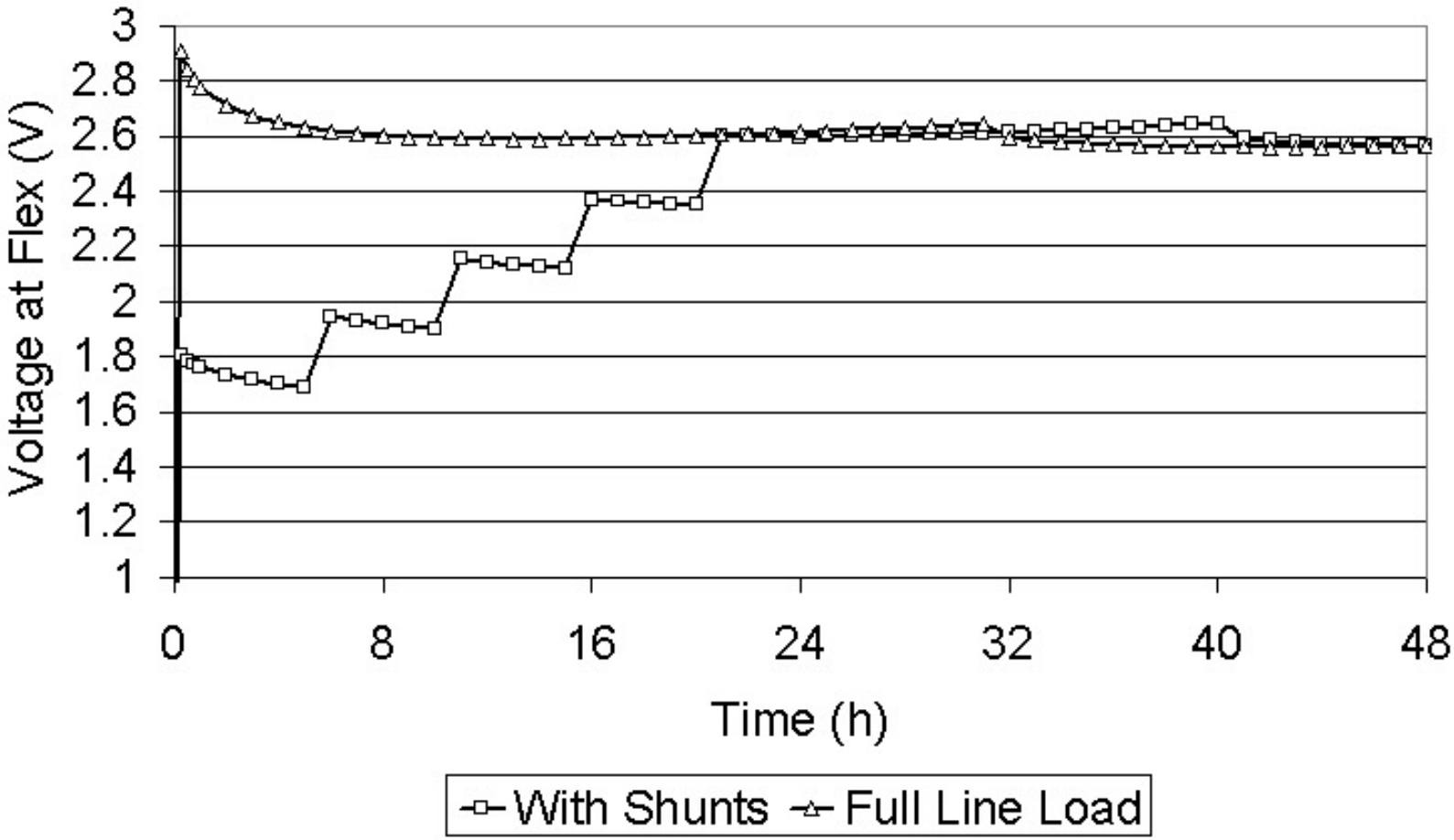


MONTRÉAL COM2006 CONFERENCE OF METALLURGISTS

# Coke-Bed Preheating Results

## Temperature

- Shunts useful to control heat-up rate.

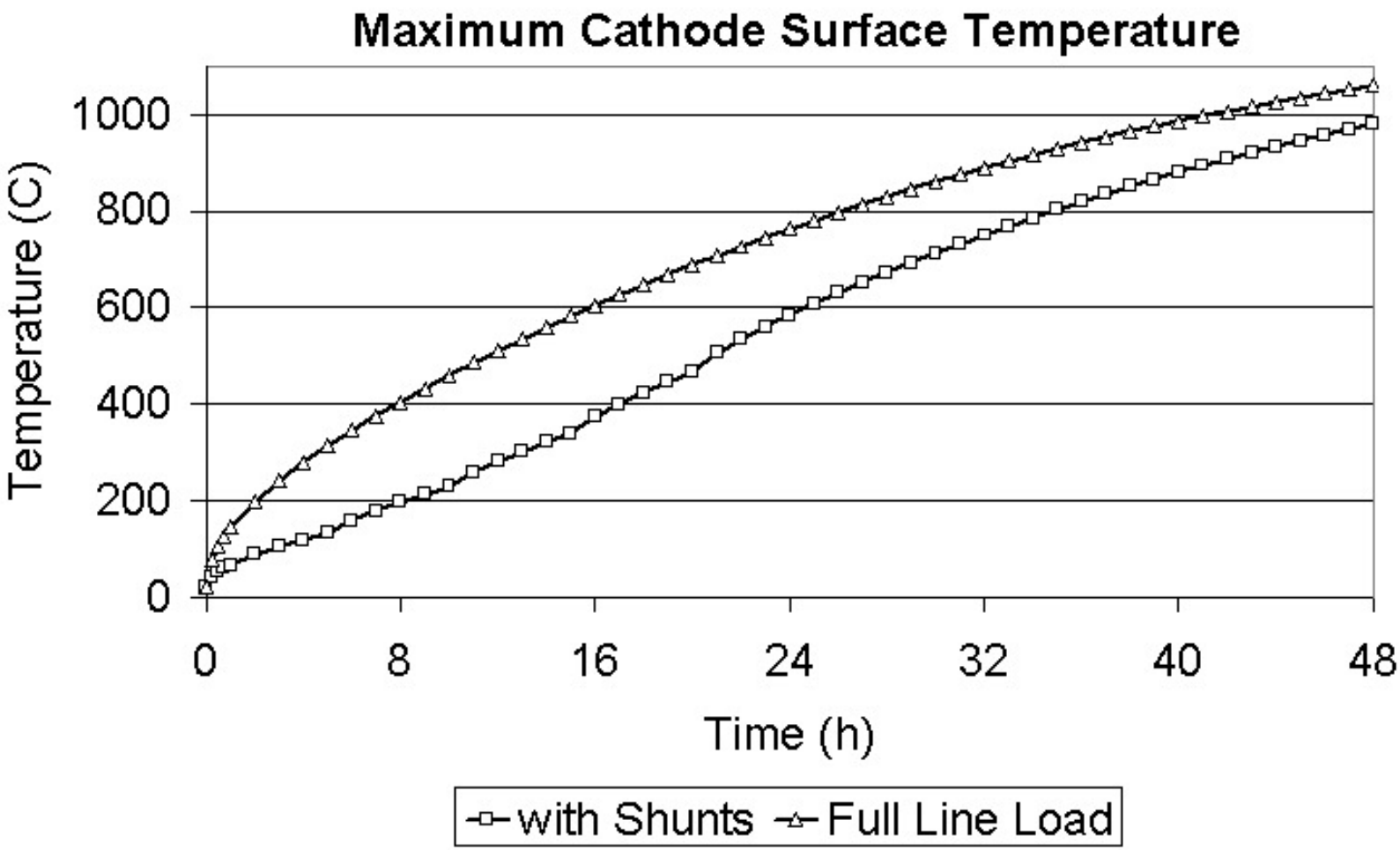


MONTRÉAL COM2006 CONFERENCE OF METALLURGISTS

# Coke-Bed Preheating Results

## Temperature

- Shunts useful to control heat-up rate.

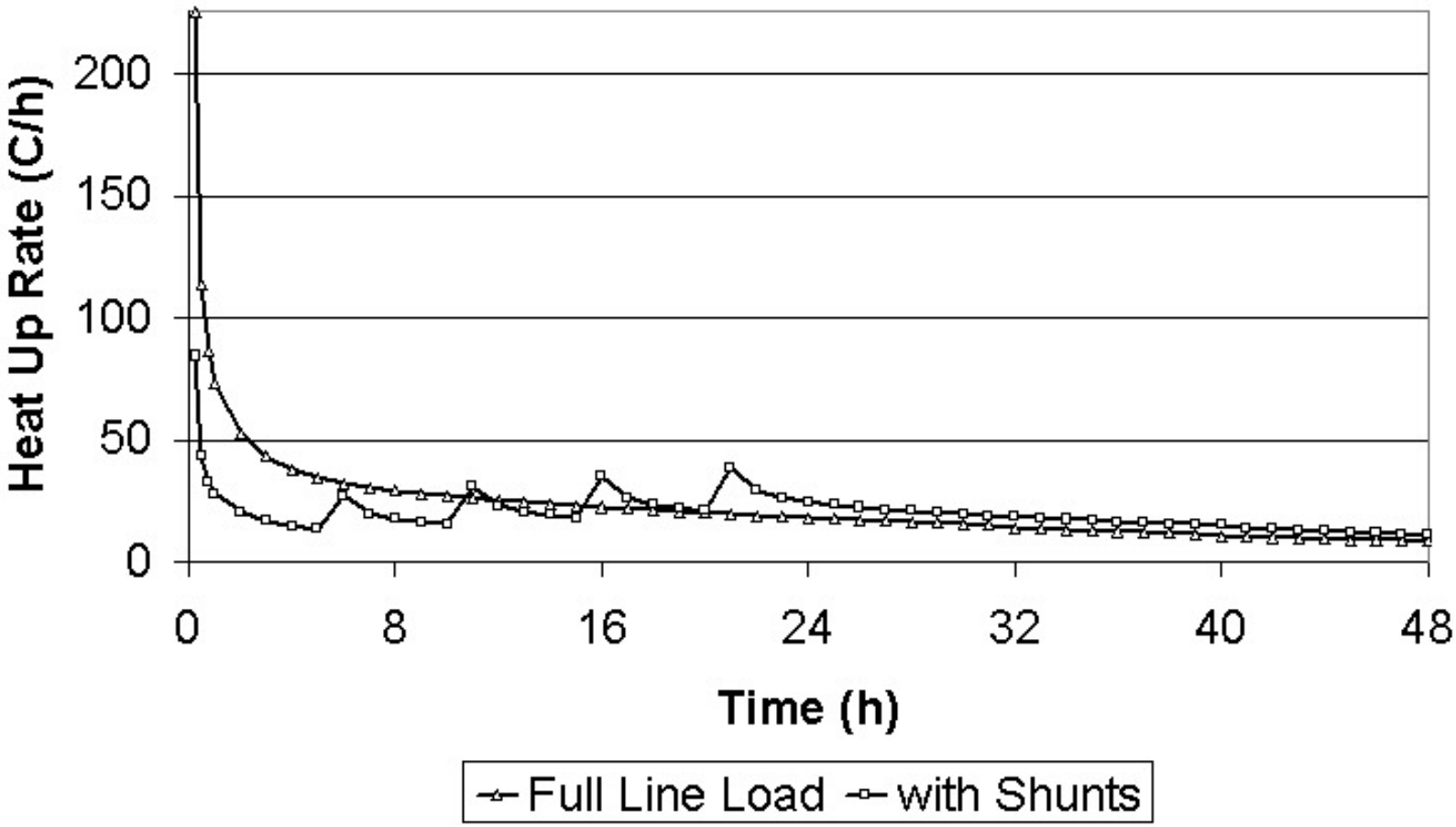


MONTRÉAL COM2006 CONFERENCE OF METALLURGISTS

# Coke-Bed Preheating Results

## Temperature

- Shunts useful to control heat-up rate.

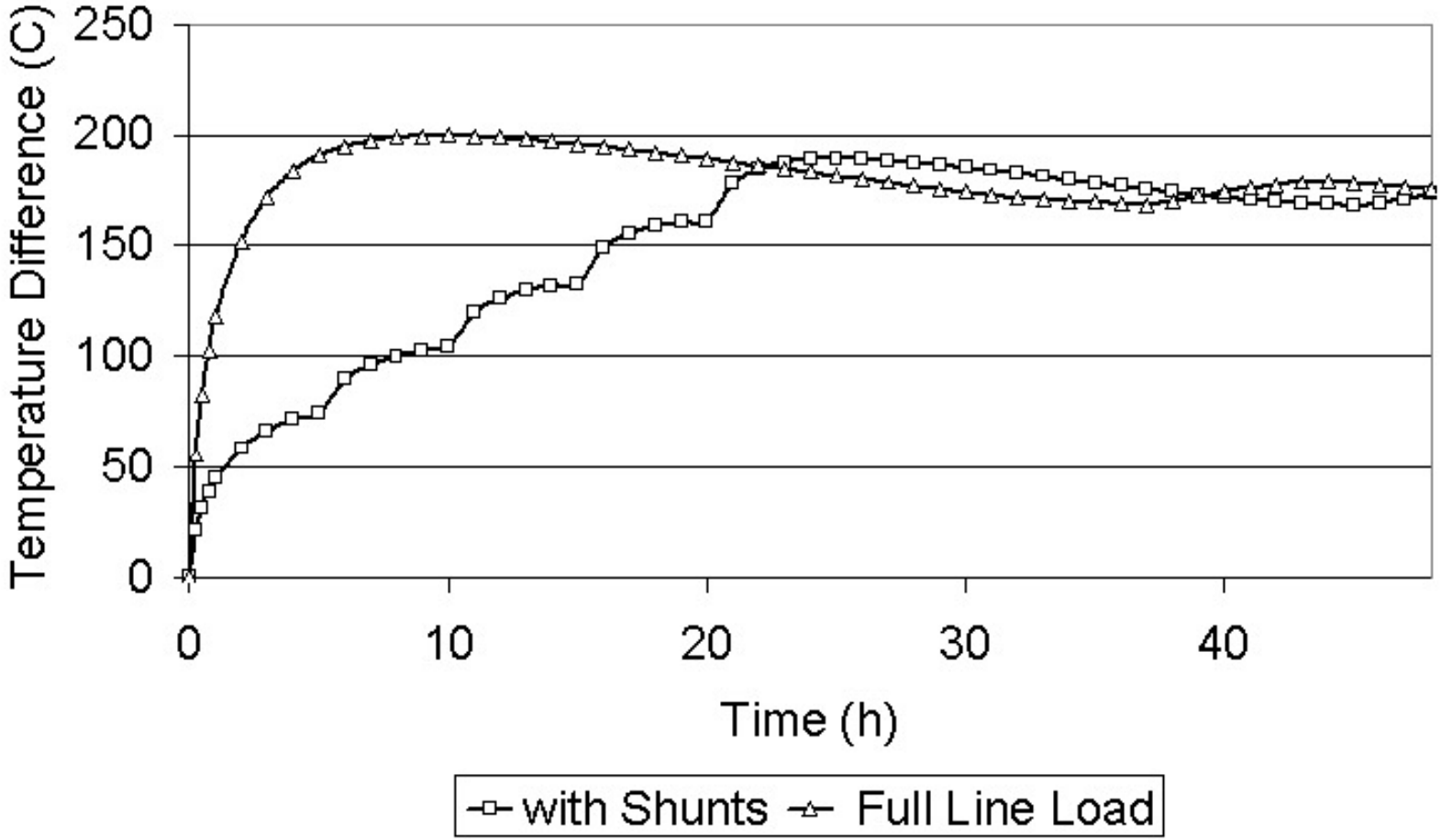


MONTRÉAL COM2006 CONFERENCE OF METALLURGISTS

# Coke-Bed Preheating Results

## Temperature

- Final Temperature after 48 h

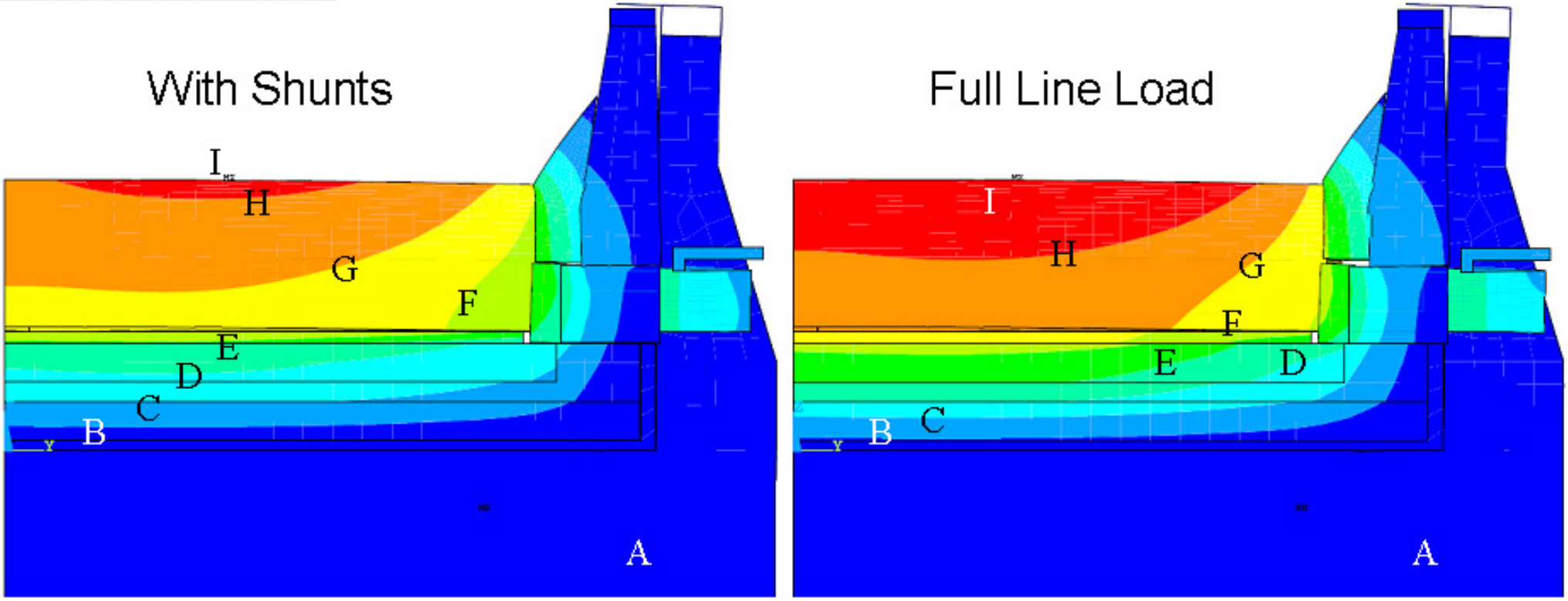


**A**:20 **B**:136 **C**:252 **D**:369 **E**:485 **F**:601 **G**:717 **H**:834 **I**:949 (ºC)

MONTRÉAL COM2006 CONFERENCE OF METALLURGISTS

# Coke-Bed Preheating Results

## Ramming Paste Baking

- Final Baking Extent

With Shunts

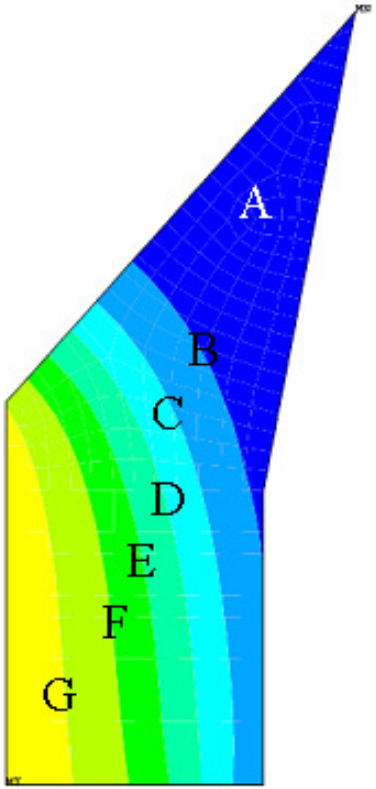


Full Line Load

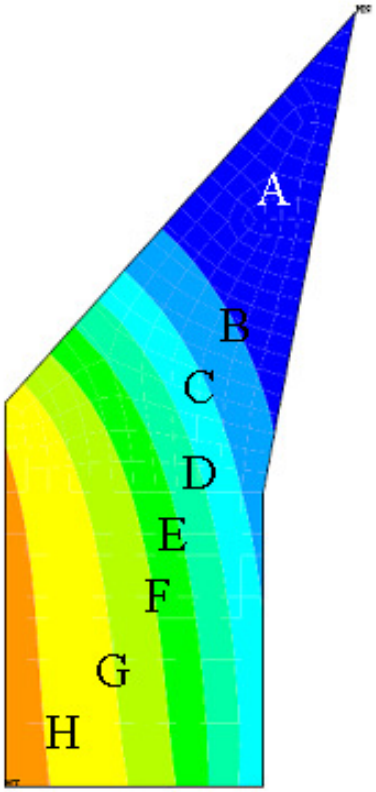


**A**: Green **B**:13 **C**:24 **D**:35 **E**:45 **F**:56 **G**:67 **H**:78 **I**:89 (%)

MONTRÉAL
COM2006
CONFERENCE OF METALLURGISTS

# Coke-Bed Preheating Results

## Ramming Paste Baking

- Paste bakes later with slower heat up rate.

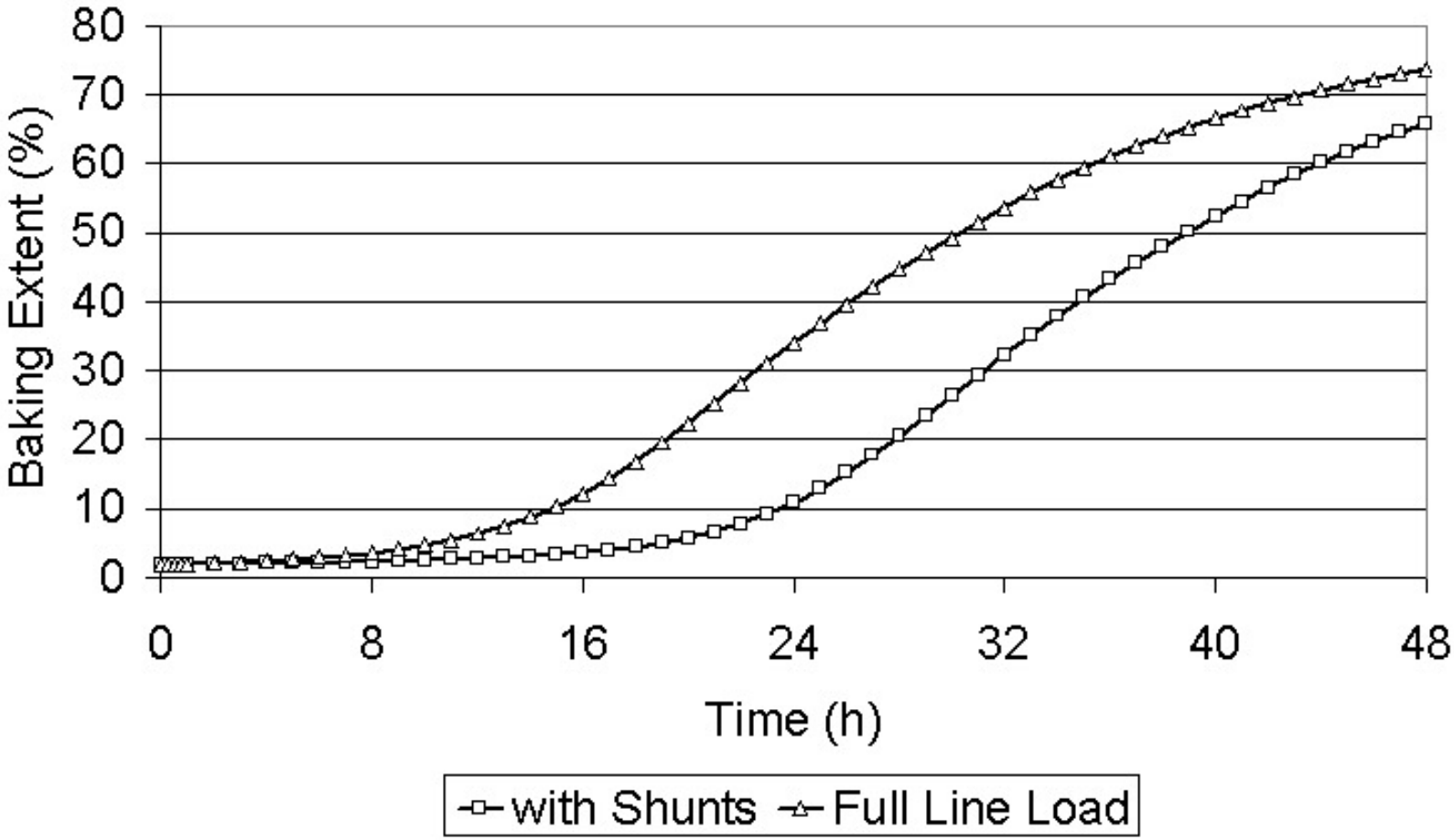


MONTRÉAL COM2006
CONFERENCE OF METALLURGISTS

# Coke-Bed Preheating Results

## Current Pick Up

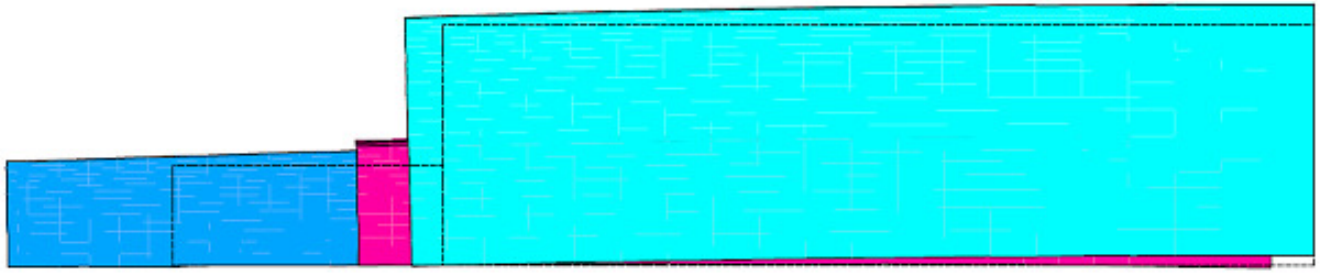

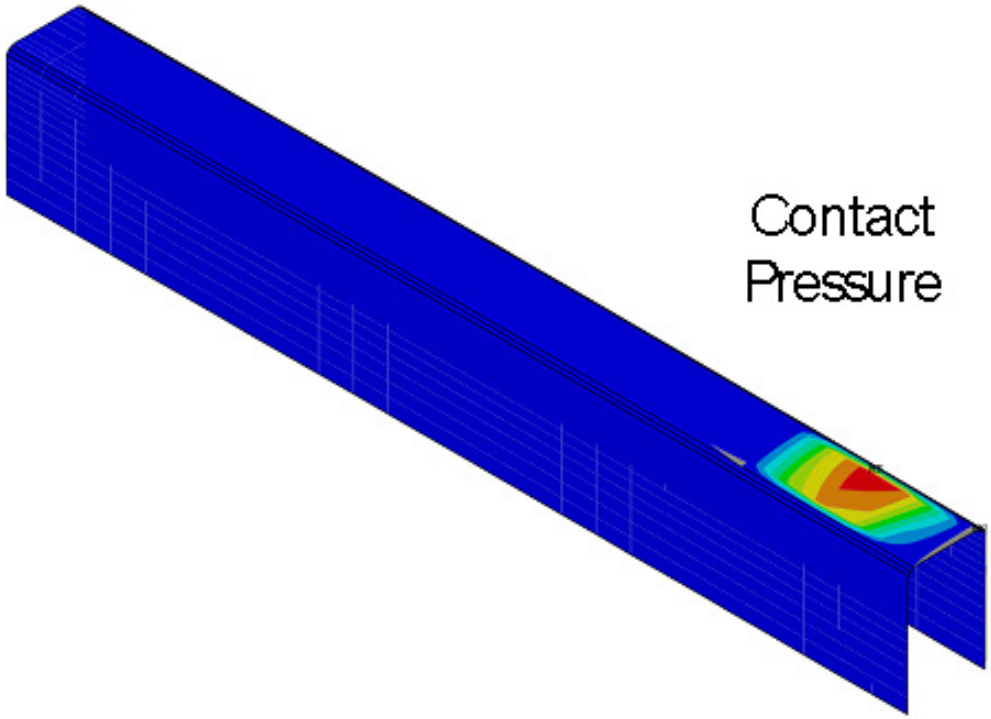


MONTRÉAL
COM2006
CONFERENCE OF METALLURGISTS

# Coke-Bed Preheating Results

## Current Pick Up

- Consistent with published data (Boivin *et al.*, TMS 1985)

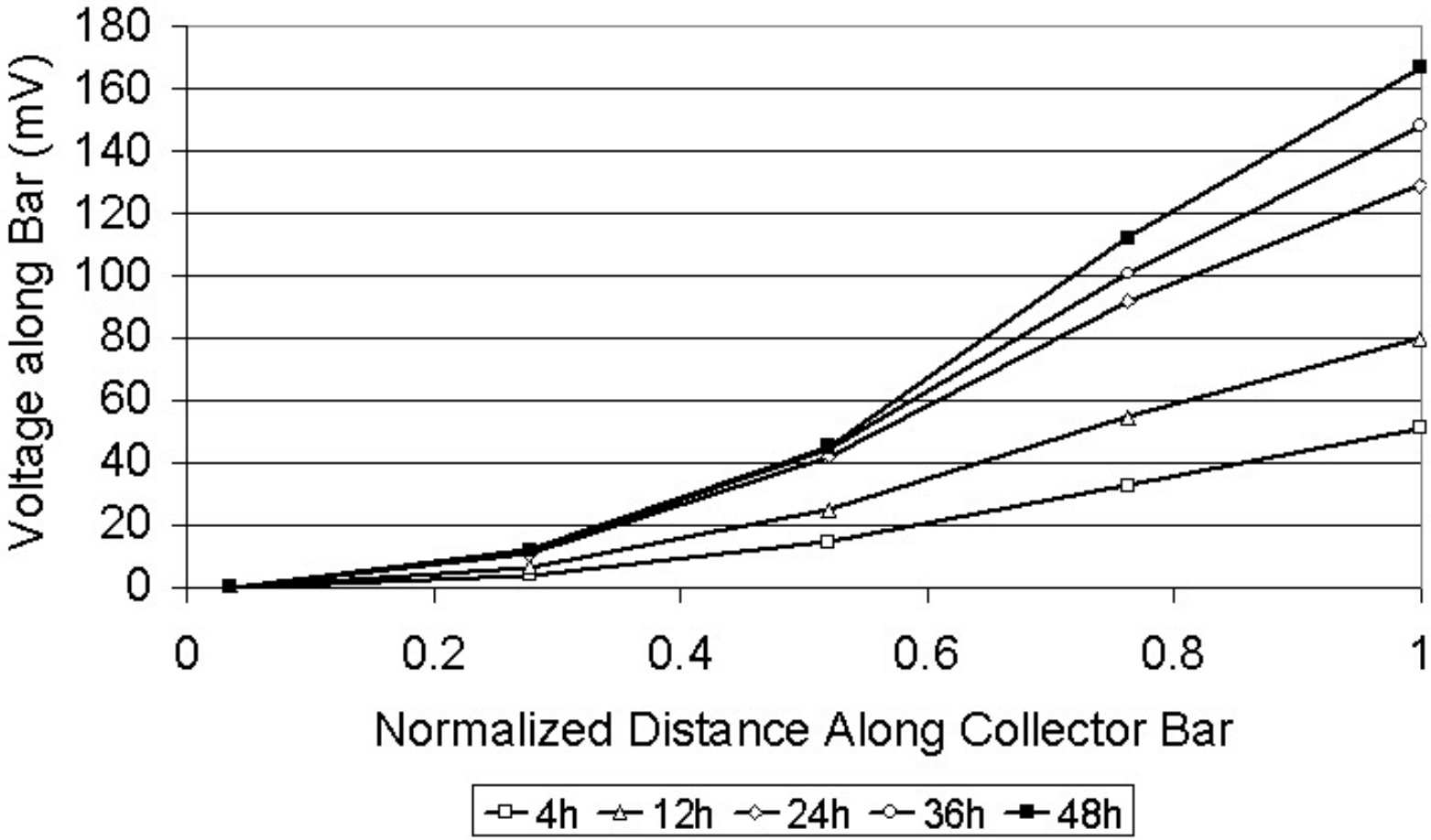


MONTRÉAL
COM2006
CONFERENCE OF METALLURGISTS

# Coke-Bed Preheating Results

## Cathode Block Stresses

- BC on Plane P3 have significant impact.

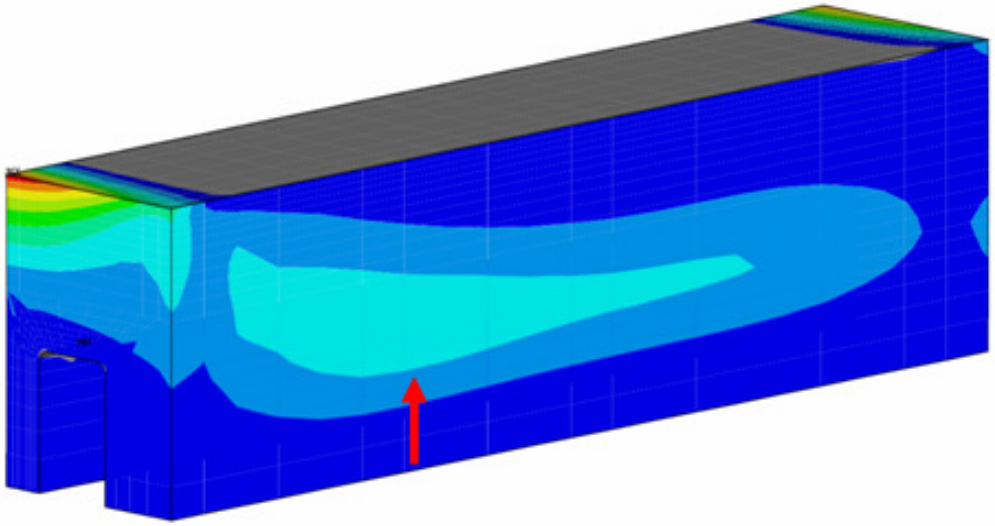

P3 is free to move

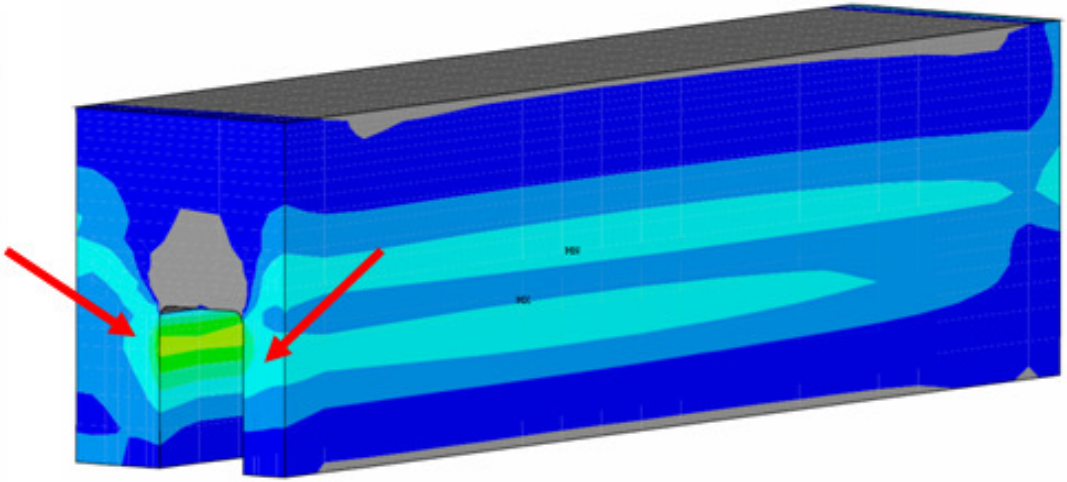

P3 is fixed

Tensile stress at 25h, with shunts

MONTRÉAL COM2006 CONFERENCE OF METALLURGISTS

# Coke-Bed Preheating Results

## Cathode Block Stresses

- When P3 is fixed at Full Line Load …

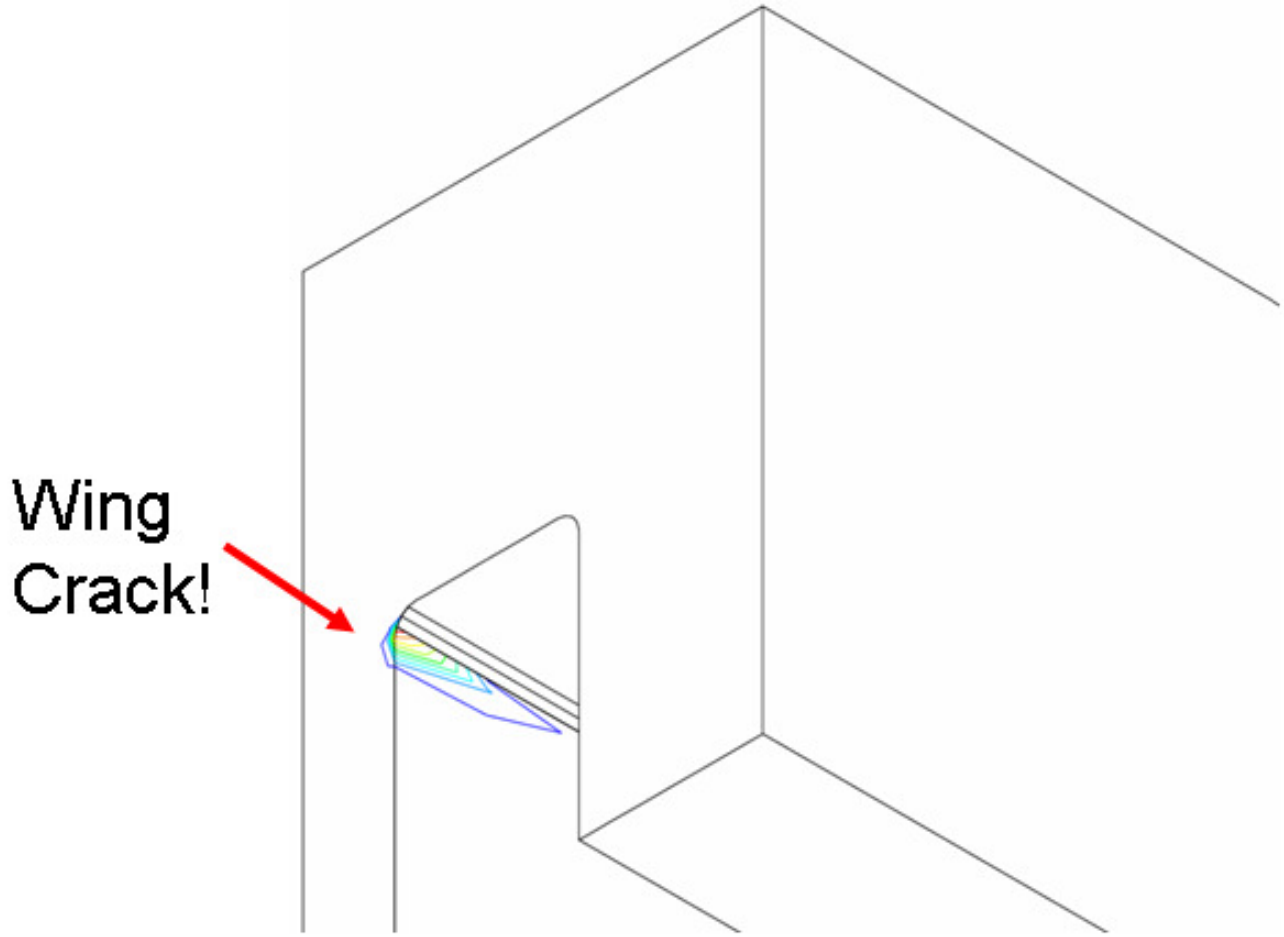


Tensile Cracking Indicator

MONTRÉAL
COM2006
CONFERENCE OF METALLURGISTS

# Conclusion (1)

- A transient coupled TEM model of a cell slice thermal preheating was built using the in-house code FESh++.
- Key features include:
  - Quasi-brittle material model for carbon
  - Ramming paste baking
  - Contact interfaces.
  - Thermo-electro-mechanical coupling at cast iron to carbon interface.
  - Temperature-dependent coke-bed resistance.

# Conclusion (2)

- A slice model is not sufficient to predict the stress state in the cathode block.
  - At least a quarter cell needs to be modeled.
- Results however hint that expansion relief in the longitudinal direction is required.
- Cathode slot geometry will influence current pick up, temperature and stresses.
- Validated numerical model is a powerful diagnostic and design tool.

# Acknowledgements


- Prof. Daniel Marceau (UQAC)
- Lowy Gunnewiek (Hatch)


HATCH™ UNIVERSITÉ LAVAL GENISIM

CRSNG NSERC UQAC Université du Québec à Chicoutimi Regroupement Aluminium REGAL Réseau de recherche sur l'aluminium

MONTRÉAL COM2006 CONFERENCE OF METALLURGISTS